High-Rigidity, High-Durability Stainless Steel Mounting Hardware For Waterproof Cube Cases



A series of brackets and mounting bases designed for installing Waterproof Cube Cases in a variety of locations.
Made from thick SUS304 stainless steel, these mounting components offer high rigidity and excellent durability.
Suitable for use in outdoor environments.

LINE UP

Product Page ▶



BR-CC-1W

Depth: 145 × Width: 61 × Height: 48 mm
Adjustable Vertical Angle

- Cube Case 125
- Cube Case 150



BR-CC-2W

Depth: 180 × Width: 77.5 × Height: 119 mm
Adjustable Vertical and Horizontal Angles

- Cube Case 125
- Cube Case 150
- Cube Case 200



BR-CC-2WS

Depth: 127 × Width: 57 × Height: 76 mm
Adjustable Vertical and Horizontal Angles

- Cube Case 100

Feature



Heavy-Gauge Stainless Steel (SUS304)

Made from SUS304 stainless steel, these brackets offer excellent resistance to rust and corrosion.
Their thicker construction provides greater rigidity than conventional brackets, ensuring high durability even in coastal environments exposed to salt corrosion.



Fully Welded Construction

Fully welded joints create a strong, unified structure.
This construction minimizes play and loosening at the joints, providing high rigidity and excellent durability.

Custom Solutions & Volume Quotations for Businesses.

From prototyping and evaluation to mass production and final delivery.
We offer tailored solutions based on your application, specifications, and order quantity.

Web

Entaniya
Entaniya Co., Ltd.
products@entaniya.co.jp

BR-CC-1W Product Page ▶





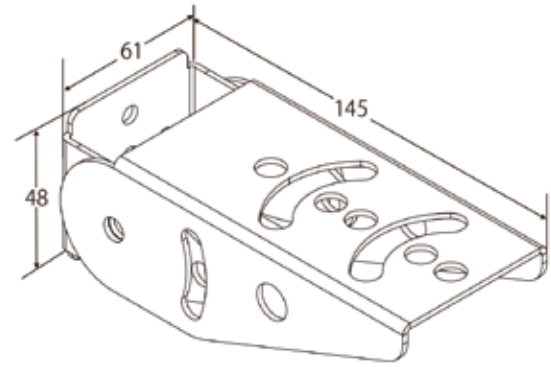



BR-CC-2W Product Page ▶





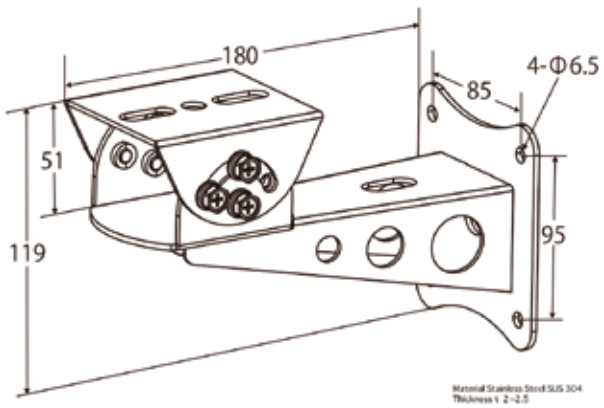



Custom Solutions & Volume Quotations for Businesses.

From prototyping and evaluation to mass production and final delivery.
We offer tailored solutions based on your application, specifications, and order quantity.

Web

Entaniya

Entaniya Co., Ltd.
products@entaniya.co.jp

BR-CC-2WS Product Page ▶





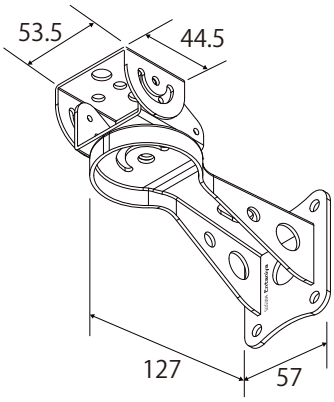



Mounting Brackets Product Page ▶


Wall-Mount Type




Pole-Mount Type



Custom Solutions & Volume Quotations for Businesses.

From prototyping and evaluation to mass production and final delivery.
We offer tailored solutions based on your application, specifications, and order quantity.

Web

Entaniya
Entaniya Co., Ltd.
products@entaniya.co.jp

Product List

Product Name	Model No.	Dimensions / Compatibility
Cube Case Bracket - Single-Axis	**BR-CC-1W**	Cube Case 125 / 150
Cube Case Bracket - Dual-Axis	**BR-CC-2W**	Cube Case 125 / 150 / 200
Cube Case Compact Bracket - Dual-Axis	**BR-CC-2WS**	Cube Case 100
Wall Mount Bracket	**BR-WM-134**	H 134 × W 134 × T 25 mm
Pole Mount Bracket 98 - Long	**BR-PM-98S**	H 170 × W 98 mm / Pole Ø40 mm or larger
Pole Mount Bracket 118 - Long	**BR-PM-118S**	H 170 × W 118 mm / Pole Ø100 mm or larger
Pole Mount Bracket 98 - Short	**BR-PM-98**	H 100 × W 98 mm / Pole Ø40 mm or larger
Pole Mount Bracket 118 - Short	**BR-PM-118**	H 100 × W 118 mm / Pole Ø100 mm or larger

Custom Solutions & Volume Quotations for Businesses.

From prototyping and evaluation to mass production and final delivery.
We offer tailored solutions based on your application, specifications, and order quantity.

Web

Entaniya
Entaniya Co., Ltd.
products@entaniya.co.jp