Interchangeable Lenses for Flexible Field-of-View Options

Raspberry Pi Camera VR220 with 220° Fisheye Lens



The VR220 is a customized Raspberry Pi Camera V2 module designed to support interchangeable M12 lenses.
It allows you to choose from fisheye, wide-angle, and telephoto lenses to suit your specific application.

Feature

Product Page ▶



VR220

Camera with 220° Fisheye Lens



Captured with the VR220 Fisheye Lens

Interchangeable Lenses for Application-Specific Fields of View



Ultra-Wide Angle



RP-L165

Distortion-Free Wide Angle



RP-L98D

Telephoto



RP-L20

Custom Solutions & Volume Quotations for Businesses.

From prototyping and evaluation to mass production and final delivery.
We offer tailored solutions based on your application, specifications, and order quantity.

Web

Entaniya
Entaniya Co., Ltd.
products@entaniya.co.jp

Field of View Comparison



Captured with Raspberry Pi Camera V2 (Vertical: 48.8° / Horizontal: 62.2° / Diagonal: 75°)



Captured with VR220 (RP-L220 — Vertical: 220° / Horizontal: 220° / Diagonal: 220°)

Interchangeable Lenses

Product Page ▶



RP-L225
V:160°
H:200°
D:225°



RP-L195
V:185°
H:195°
D:195°



RP-L185
V:145°
H:185°
D:185°



RP-L165
V:90°
H:123°
D:161°



RP-L98D
V:70°
H:85°
D:100°



RP-L125
V:63°
H:102°
D:121°



RP-L100
V:60°
H:80°
D:100°



RP-L98
V:56°
H:5°
D:98°



RP-L85
V:49°
H:66°
D:83.4°



RP-L55
V:45°
H:60°
D:70°



RP-L20
V:13°
H:17°
D:22°



Custom Solutions & Volume Quotations for Businesses.

From prototyping and evaluation to mass production and final delivery.
We offer tailored solutions based on your application, specifications, and order quantity.

Web

Entaniya

Entaniya Co., Ltd.
products@entaniya.co.jp

Sensor Cover Model

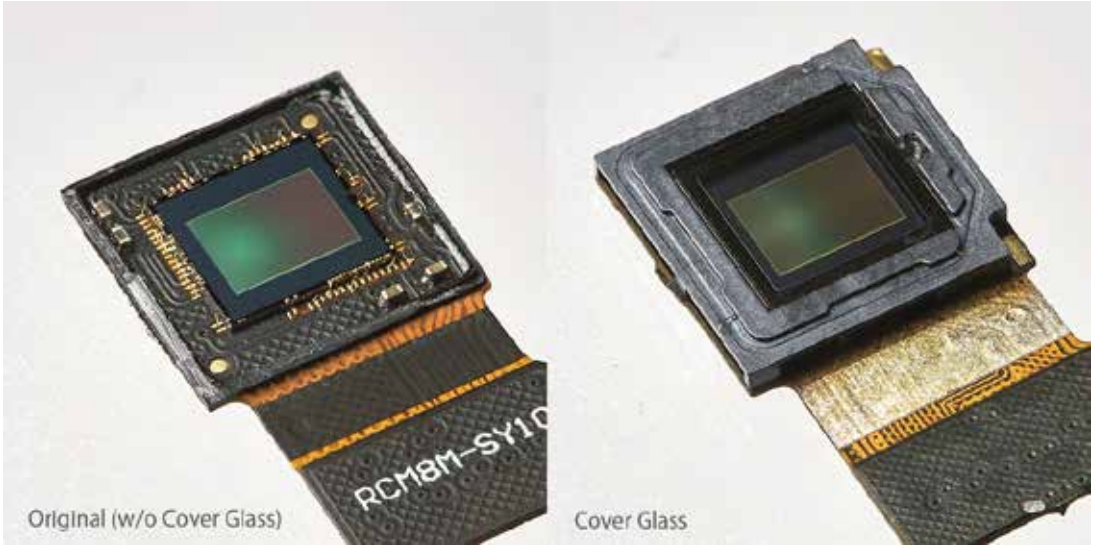

his model features a protective cover glass over the image sensor.
In the standard model, the sensor is exposed, requiring careful cleaning with an air blower or similar tool to remove dust.
Frequent lens changes or use in dusty environments may increase the risk of dust and contamination on the sensor.
With the cover glass model, the surface can be easily cleaned using a soft cloth.
Ideal for use in dusty environments, long-term operation, and applications requiring frequent lens changes.

Accessories



Basic Pro

Camera Housing

Allows Camera Use Outdoors and in Dusty Environments.



Camera Mount

Mounting Plate for Attaching
the Camera to a Tripod or Other Equipment



Mounting Equipment

Equipment for Easy Camera Installation



HDMI Extension
Up to Approximately 2m

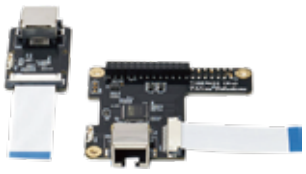

LAN Extension
Up to Approximately 10 m

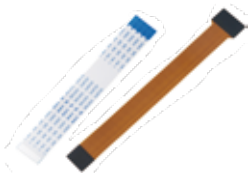

FFC • FPC
Available in Various Lengths

Camera Cable Extension

Custom Solutions & Volume Quotations for Businesses.

From prototyping and evaluation to mass production and final delivery.
We offer tailored solutions based on your application, specifications, and order quantity.

Web

Entaniya
Entaniya Co., Ltd.
products@entaniya.co.jp

Size

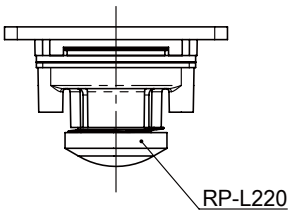

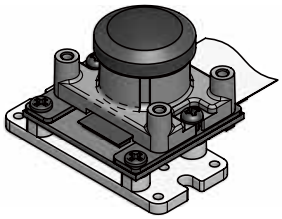

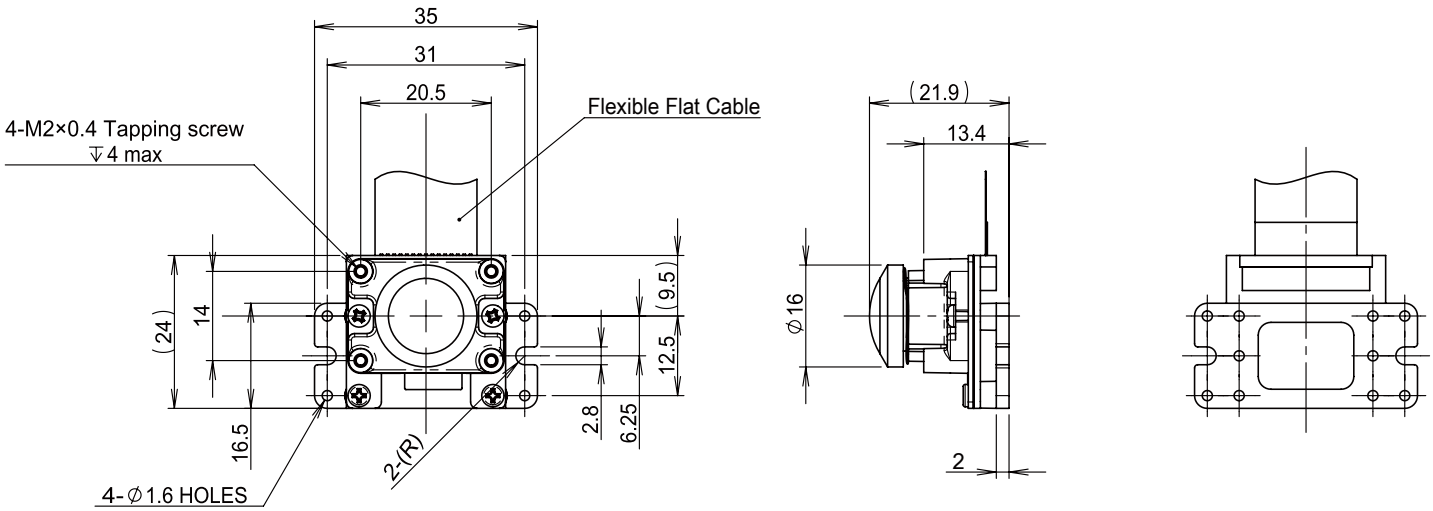

Part Number	IR Cut Filter	Sensor Cover Glass
RP-VC1	Yes	No
RP-VC1N	No	No
RP-VC1G	Yes	Yes
RP-VC1GN	No	Yes

Raspberry Pi is a trademark of Raspberry Pi Ltd.

Custom Solutions & Volume Quotations for Businesses.

From prototyping and evaluation to mass production and final delivery.
We offer tailored solutions based on your application, specifications, and order quantity.

Web

Entaniya

Entaniya Co., Ltd.
products@entaniya.co.jp