Protect Raspberry Pi Cameras from Dust and Water

All-Weather Camera Housing WC-01



Compatible with Raspberry Pi Camera V2, V3, V3 Wide, AI Camera, and VR220

An all-weather dome housing designed for outdoor installation, compatible with Raspberry Pi Camera Modules.

An O-ring between the dome and base ensures a tight seal, helping prevent rain and dust from entering and protecting the camera inside.
All-Weather Dome Camera Housing for Outdoor Use

Feature

Product Page ▶



WC-01



Made with Weather-Resistant ASA Resin

Compatible Cameras



V2



V3 • V3 wide



AI Camera



VR220

Water- and Dust-Resistant Design for Protection Against Rain and Dust



The images above were captured using the VR220 camera with a 220° fisheye lens.

Features a Clear Dome Cover with Minimal Optical Distortion



Original　　Captured Inside the WC-01 Housing

Options



Tinted Type
Makes the Camera Less Noticeable
WC-01-SMK



Mounting Base
Convenient Wall-Mounting Bracket
WCM-01



Anti-Reflection Cover
Reduces Reflections from Strong Light Sources
RP-CM3-RC

Reduced Reflections with the Cover Installed



Without Cover

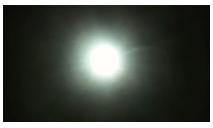

With Cover

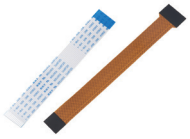

FFC • FPC
Available in Various Lengths

Professional Camera Housing

Enhanced Waterproof and Dustproof Protection for Reliable Long-Term Operation, with Built-In Condensation Prevention.
Supports Remote Camera Installation via HDMI or LAN Cables.

Product Page ▶



Custom Solutions & Volume Quotations for Businesses.

From prototyping and evaluation to mass production and final delivery.
We offer tailored solutions based on your application, specifications, and order quantity.

Web

Entaniya
Entaniya Co., Ltd.
products@entaniya.co.jp

Size

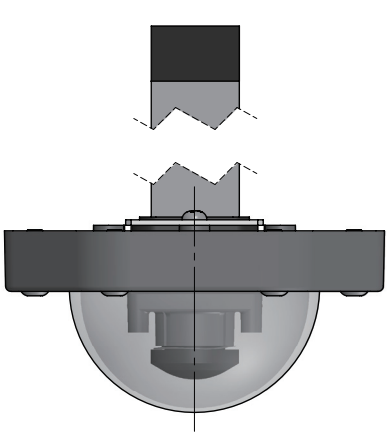

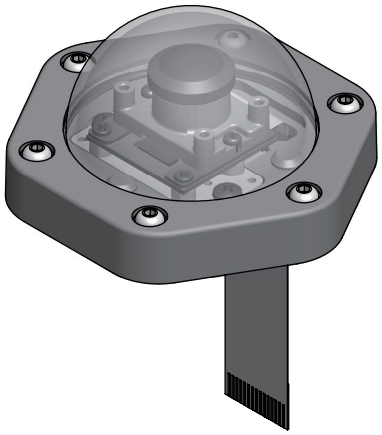

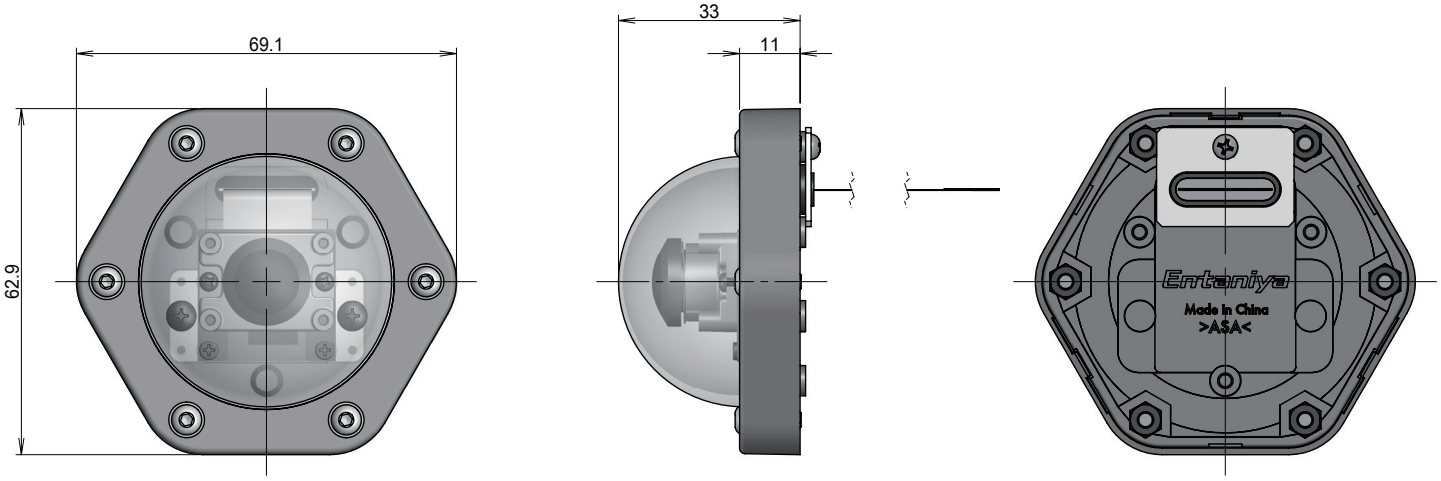

Application Examples





Raspberry Pi is a trademark of Raspberry Pi Ltd.

Custom Solutions & Volume Quotations for Businesses.

From prototyping and evaluation to mass production and final delivery.
We offer tailored solutions based on your application, specifications, and order quantity.

Web

Entaniya

Entaniya Co., Ltd.
products@entaniya.co.jp