Waterproof Cube Case Expanding the Possibilities of Industrial Equipment

A waterproof enclosure with six interchangeable panels.
Accommodates cameras, sensors, and various electronic devices.
Easily customizable to suit your needs, from prototyping to mass production.

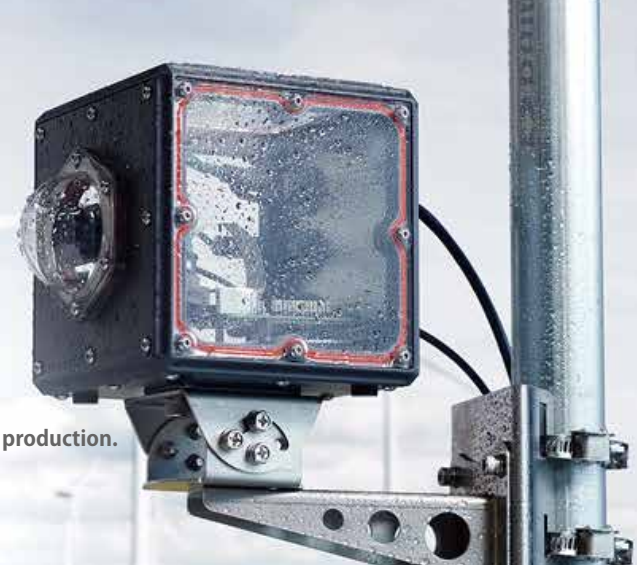

IP68

Six-Sided Modular Design
with Interchangeable Panels

All six panels are removable and interchangeable, allowing you to add the functions you need to each side.



Cameras & Instruments

Dome Window Panel
Lens Hood Panel



Cooling

Heat Sink Panel

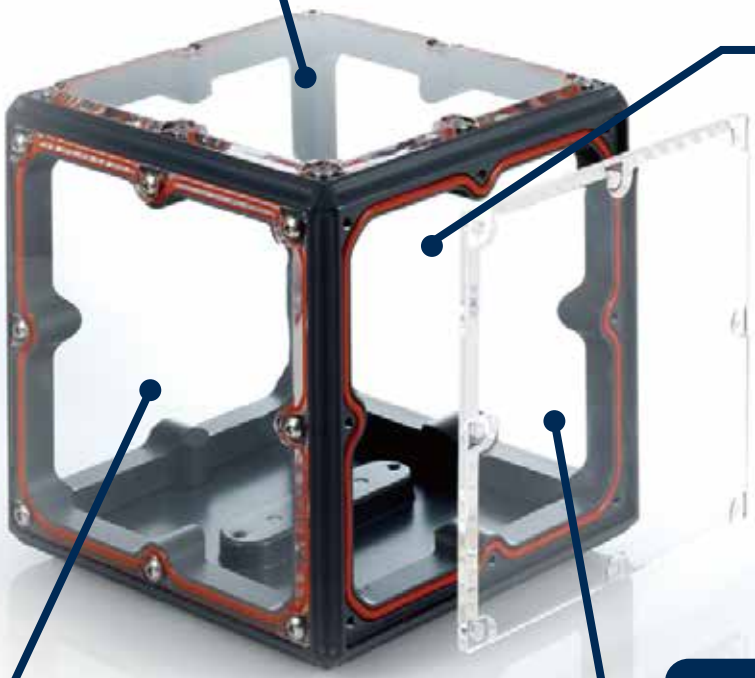



Raspberry Pi

Mounting Panel
Heat Pipe Panel



External Connections

Waterproof Connector
Waterproof Cable Panel



Mounting & Installation

Stainless Steel Bracket

※Raspberry Pi is a trademark of Raspberry Pi Ltd.

Custom Solutions & Volume Quotations for Businesses.

From prototyping and evaluation to mass production and final delivery.
We offer tailored solutions based on your application, specifications, and order quantity.

Web

Entaniya

Entaniya Co., Ltd.
products@entaniya.co.jp

LINE UP Sizes to Suit Your Application

Product Page ▶

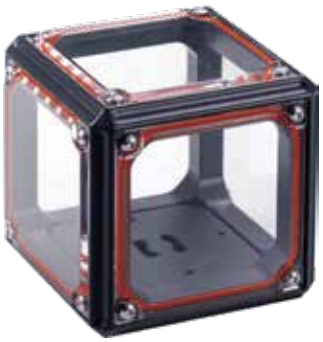

Cube Case 100

100 x 100 x 100 mm
Approx 660g

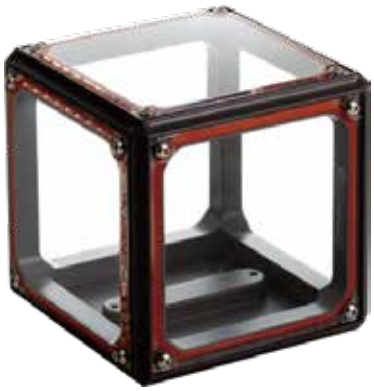

Cube Case 125

125 x 125 x 125 mm
Approx 950g



Cube Case 150

150 x 150 x 150 mm
Approx 1250g

Interchangeable Panels

Interchangeable Panels Overview ▶



Window Panel



Lens Hood Panel



Connector Panel



Heat Sink Panel



Bottom Panel



Wire Mounting Panel



Mounting Plate Panel



Heat Pipe Panel

Accessories A Wide Range of Accessories for Mounting and External Connectivity



Mounting Brackets



Waterproof Cables & Connectors

Mounting Brackets ▶
Waterproof Cables & Connectors ▶



Applications Versatile Solutions for a Wide Range of Applications



Factories & Industrial Plants



Marine & Coastal Environments



Agriculture & Plant Monitoring



Research & Development



River Monitoring

Custom Solutions & Volume Quotations for Businesses.

From prototyping and evaluation to mass production and final delivery.
We offer tailored solutions based on your application, specifications, and order quantity.

Web

Entaniya

Entaniya Co., Ltd.
products@entaniya.co.jp

Product Name	Waterproof Cube Case 100	Waterproof Cube Case 125	Waterproof Cube Case 150	Waterproof Cube Case 200
Size External Dimensions: Internal Dimensions:	100 × 100 × 100 mm 70 × 70 × 70 mm	125 × 125 × 125 mm 95 × 95 × 95 mm	150 × 150 × 150 mm 120 × 120 × 120 mm	200 × 200 × 200 mm 170 × 170 × 170 mm
Dustproof and Waterproof Protection	IP68-Rated	IP68-Rated	IP68-Rated	IP68-Rated
Panels	Acrylic Panels × 5 Bottom Panel × 1	Acrylic Panels × 5 Bottom Panel × 1	Acrylic Panels × 5 Bottom Panel × 1	Acrylic Panels × 5 Bottom Panel × 1
Bottom Panel Mounting Holes	3/8-16 × 2 1/4-20 × 1	3/8-16 × 3 1/4-20 × 2	3/8-16 × 3 1/4-20 × 2	3/8-16 × 3 1/4-20 × 2
Part Number	CC-WP-100	CC-WP-125	CC-WP-150	CC-WP-200
Approximate Weight	Approximate 660 g	Approximate 950 g	Approximate 1250 g	
Application Examples	Compact Cameras Temperature and Humidity Sensors Industrial Cameras Compact IoT Devices and Sensors	Compact AI Devices Raspberry Pi Cameras Raspberry Pi 4 / 5 For Raspberry Pi Applications	Expanded Raspberry Pi 4 / 5 Systems Surveillance Systems PoE Devices For Advanced Edge Computing	Large Capacity

Titanium Frame (Made to Order)

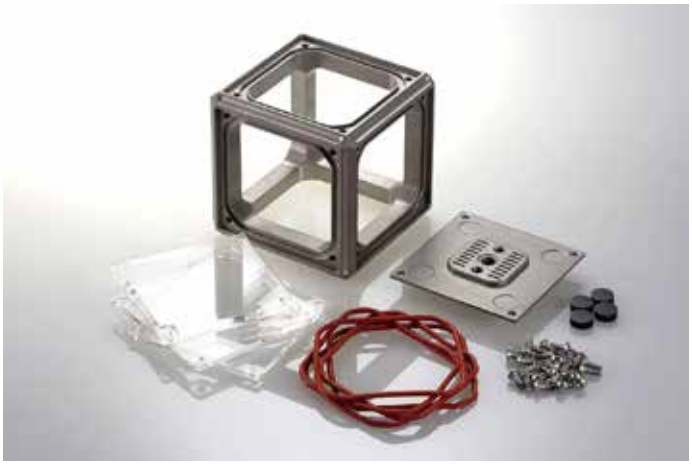



A custom Waterproof Cube Case featuring a one-piece frame machined from a solid block of Grade 3 commercially pure titanium, designed for environments requiring high corrosion resistance.
The titanium frame is precision-machined from a solid titanium block, replacing the standard frame of the Waterproof Cube Case.
This custom design maintains the sealed structure of the Waterproof Cube Case while providing the excellent corrosion resistance of titanium.

Custom Solutions & Volume Quotations for Businesses.

From prototyping and evaluation to mass production and final delivery.
We offer tailored solutions based on your application, specifications, and order quantity.

Web

Entaniya

Entaniya Co., Ltd.
products@entaniya.co.jp

Panels with Dome or Flat Windows





Dome and Flat Window Panels for Easy Camera Installation
Dome window panels designed for convenient installation of cameras and other equipment inside Waterproof Cube Cases.
In addition to dome-type panels, flat window panels are also available, allowing easy visual inspection of equipment inside the case.
Dome panels include a camera mounting plate with mounting holes for Raspberry Pi cameras and other compatible devices.

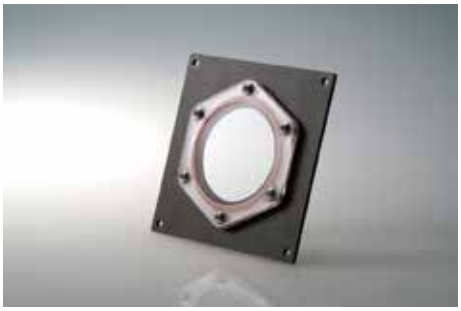

Φ60 Flat Window

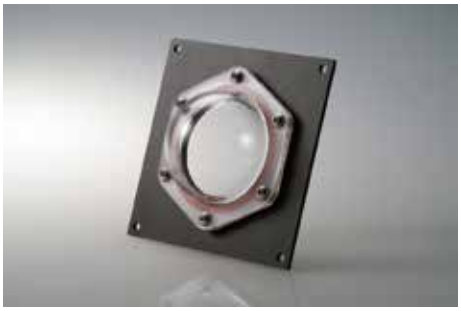

Φ60 Dome Window 35mm(Standard)

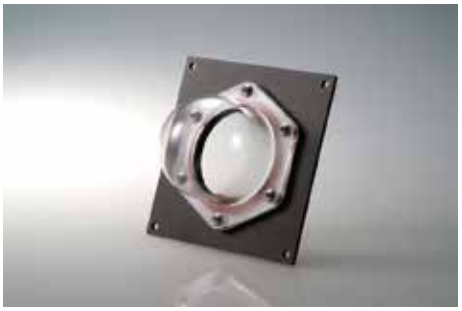

Φ60 Dome Window 52mm

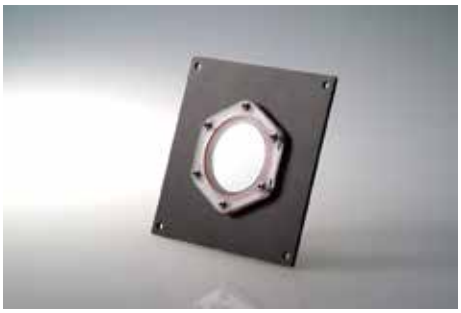

Φ45 Flat Window



Φ45 Dome Window 27mm

Custom Solutions & Volume Quotations for Businesses.

From prototyping and evaluation to mass production and final delivery.
We offer tailored solutions based on your application, specifications, and order quantity.

Web

Entaniya

Entaniya Co., Ltd.
products@entaniya.co.jp

For Waterproof Cube Case 100

Window Size	Window Type	Dome Height	Part Number
Φ60 mm	Flat Window	—	CCWP100-PNL-H0
Φ60 mm	Dome Window	52 mm	CCWP100-PNL-H52
Φ60 mm	Dome Window	35 mm	CCWP100-PNL-H35
Φ45 mm	Flat Window	—	CCWP100-PNL-H0S
Φ45 mm	Dome Window	27 mm	CCWP100-PNL-H27S

For Waterproof Cube Case 125

Window Size	Window Type	Dome Height	Part Number
Φ60 mm	Flat Window	—	CCWP125-PNL-H0
Φ60 mm	Dome Window	52 mm	CCWP125-PNL-H52
Φ60 mm	Dome Window	35 mm	CCWP125-PNL-H35
Φ45 mm	Flat Window	—	CCWP125-PNL-H0S
Φ45 mm	Dome Window	27 mm	CCWP125-PNL-H27S

For Waterproof Cube Case 150

Window Size	Window Type	Dome Height	Part Number
Φ60 mm	Flat Window	—	CCWP150-PNL-H0
Φ60 mm	Dome Window	52 mm	CCWP150-PNL-H52
Φ60 mm	Dome Window	35 mm	CCWP150-PNL-H35
Φ45 mm	Flat Window	—	CCWP150-PNL-H0S
Φ45 mm	Dome Window	27 mm	CCWP150-PNL-H27S

For Waterproof Cube Case 200

Window Size	Window Type	Dome Height	Part Number
Φ60 mm	Flat Window	—	CCWP200-PNL-H0
Φ60 mm	Dome Window	52 mm	CCWP200-PNL-H52
Φ60 mm	Dome Window	35 mm	CCWP200-PNL-H35
Φ45 mm	Flat Window	—	CCWP200-PNL-H0S
Φ45 mm	Dome Window	27 mm	CCWP200-PNL-H27S

Custom Solutions & Volume Quotations for Businesses.

From prototyping and evaluation to mass production and final delivery.
We offer tailored solutions based on your application, specifications, and order quantity.

Web

Entaniya

Entaniya Co., Ltd.
products@entaniya.co.jp

Lens Hood Panel



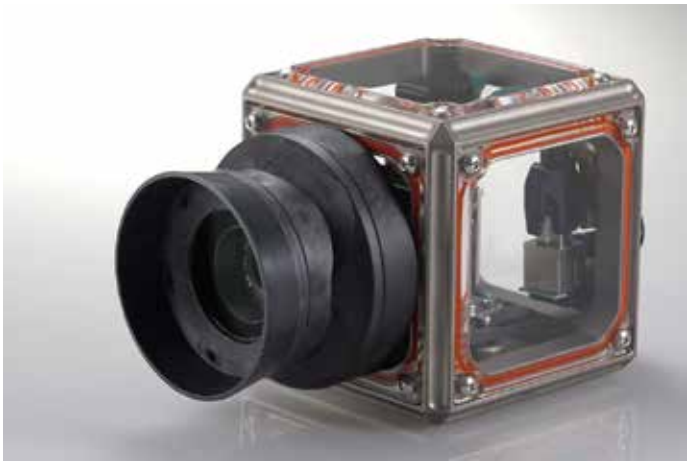





Made from sapphire glass and PPA resin reinforced with 15% glass fiber, the lens hood offers excellent weather resistance and chemical resistance, ensuring stable performance over long periods, even in harsh environments.
The sapphire glass features anti-reflective and anti-fouling coatings.

Camera Mounting Plate (Optional)





Custom Solutions & Volume Quotations for Businesses.

From prototyping and evaluation to mass production and final delivery.
We offer tailored solutions based on your application, specifications, and order quantity.

Web

Entaniya

Entaniya Co., Ltd.
products@entaniya.co.jp

For Waterproof Cube Case 100

Product Name	Part Number
Camera Mounting Plate for Lens Hood Panel	CC-WP-100-PNL-LH-SG
Lens Hood Panel – Sapphire Glass Window + Camera Mounting Plate Set	CC-WP-100-PNL-LH-SG-CM
Lens Hood Panel – Sapphire Glass Window	OLH-SG-CM

For Waterproof Cube Case 125

Product Name	Part Number
Camera Mounting Plate for Lens Hood Panel	CC-WP-125-PNL-LH-SG
Lens Hood Panel – Sapphire Glass Window + Camera Mounting Plate Set	CC-WP-125-PNL-LH-SG-CM
Lens Hood Panel – Sapphire Glass Window	OLH-SG-CM

For Waterproof Cube Case 150

Product Name	Part Number
Camera Mounting Plate for Lens Hood Panel	CC-WP-150-PNL-LH-SG
Lens Hood Panel – Sapphire Glass Window + Camera Mounting Plate Set	CC-WP-150-PNL-LH-SG-CM
Lens Hood Panel – Sapphire Glass Window	OLH-SG-CM

For Waterproof Cube Case 200

Product Name	Part Number
Camera Mounting Plate for Lens Hood Panel	CC-WP-200-PNL-LH-SG
Lens Hood Panel – Sapphire Glass Window + Camera Mounting Plate Set	CC-WP-200-PNL-LH-SG-CM
Lens Hood Panel – Sapphire Glass Window	OLH-SG-CM

Custom Solutions & Volume Quotations for Businesses.

From prototyping and evaluation to mass production and final delivery.
We offer tailored solutions based on your application, specifications, and order quantity.

Web

Entaniya

Entaniya Co., Ltd.
products@entaniya.co.jp

Heat Sink Panel





The heat sink panel features approximately twice the surface area of a flat aluminum panel of the same size, providing heat dissipation performance equivalent to two standard panels.
It efficiently transfers heat generated inside the case to the outside, helping to reduce internal temperature rise.

Product Name	Part Number
Heat Sink Panel 100	CC-WP-100-PNL-HS
Heat Sink Panel 125	CC-WP-125-PNL-HS
Heat Sink Panel 150	CC-WP-150-PNL-HS
Heat Sink Panel 200	CC-WP-200-PNL-HS

Custom Solutions & Volume Quotations for Businesses.

From prototyping and evaluation to mass production and final delivery.
We offer tailored solutions based on your application, specifications, and order quantity.

Web

Entaniya

Entaniya Co., Ltd.
products@entaniya.co.jp

Heat Sink Panel with Cooling Fan

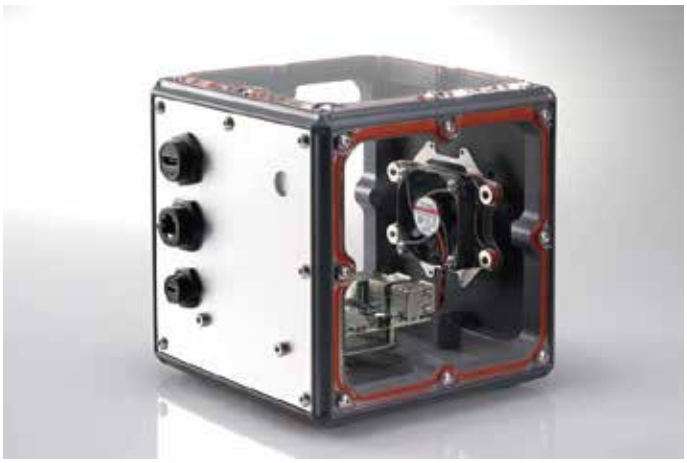



A cooling system for sealed enclosures that combines a heat sink panel with a low-noise fan.
The internal fan promotes air circulation, efficiently transferring heat to the heat sink panel.
By dissipating heat to the outside while maintaining the enclosure's sealed structure, the system helps reduce internal temperature rise.





Floating Anti-Vibration Mounting Structure

The O-ring-based floating structure effectively minimizes the transmission of fan vibrations to the enclosure.
This significantly reduces operating noise, ensuring excellent quiet performance.

Product Name	Part Number
Heat Sink Panel with Cooling Fan 100	CC-WP-100-PNL-HS-FAN
Heat Sink Panel with Cooling Fan 125	CC-WP-125-PNL-HS-FAN
Heat Sink Panel with Cooling Fan 150	CC-WP-150-PNL-HS-FAN
Heat Sink Panel with Cooling Fan 200	CC-WP-200-PNL-HS-FAN

Custom Solutions & Volume Quotations for Businesses.

From prototyping and evaluation to mass production and final delivery.
We offer tailored solutions based on your application, specifications, and order quantity.

Web

Entaniya

Entaniya Co., Ltd.
products@entaniya.co.jp

Connector Panel





A panel featuring openings for waterproof connectors, allowing cables to be routed from inside the enclosure to the outside.
Enables cable connections while maintaining the enclosure's waterproof integrity.

Product Name		Part Number
Connector Panel 100 195	USB Type-A, HDMI, RJ45 Connector Compatible × 1, Vent Filter × 1	CC-WP-100-PNL-AL25-CN195
Connector Panel 100 158	USB Type-C Connector Compatible × 1, Vent Filter × 1	CC-WP-100-PNL-AL25-CN195
Connector Panel 125	USB Type-C × 1 / USB Type-A, HDMI, RJ45 Connector Compatible × 2 / Vent Filter × 1	CC-WP-125-PNL-AL25-CN
Connector Panel 150	USB Type-C × 1 / USB Type-A, HDMI, RJ45 Connector Compatible × 2 / Vent Filter × 1	CC-WP-150-PNL-AL25-CN

Bottom Panel

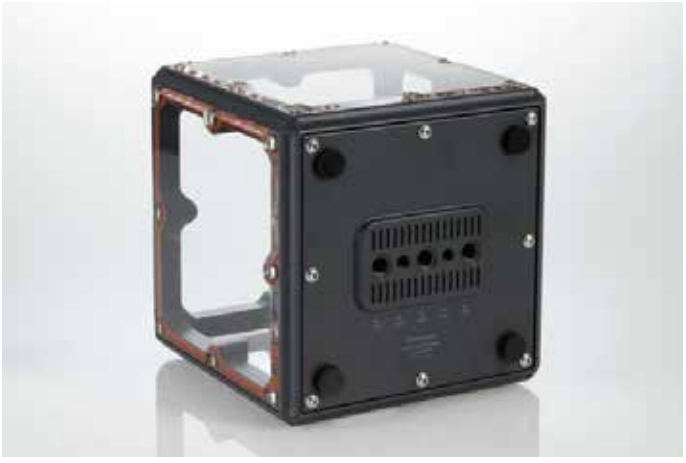

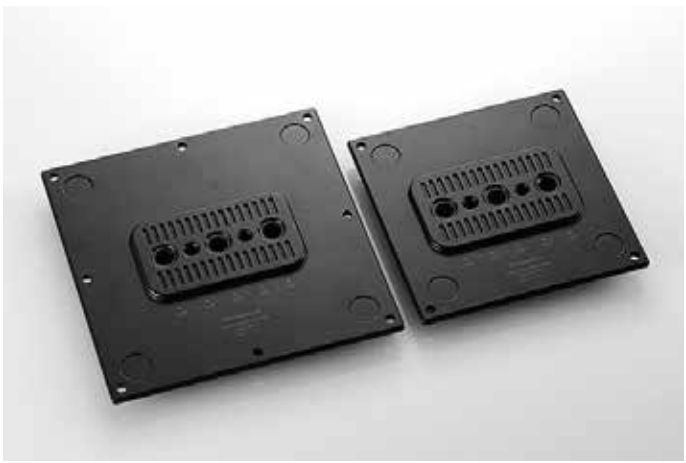

An aluminum panel featuring tripod mounting threaded holes.
Adding it to the bottom or sides of the enclosure provides greater mounting flexibility and expandability.

Product Name		Part Number
Bottom Panel 100	Outer Side: 1/4-20 x 2, 3/8-16 x 1 Inner Side: M5x0.8 x 2	CC100-BP-TS
Bottom Panel 125	Outer Side: 1/4-20 x 2, 3/8-16 x 3 Inner Side: M4x0.7 x 2	CC125-BP-TS
Bottom Panel 150	Outer Side: 1/4-20 x 2, 3/8-16 x 3 Inner Side: M4x0.7 x 2	CC150-BP-TS
Bottom Panel 200	Outer Side: 1/4-20 x 2, 3/8-16 x 3 Inner Side: M4x0.7 x 2	CC200-BP-TS

Custom Solutions & Volume Quotations for Businesses.

From prototyping and evaluation to mass production and final delivery.
We offer tailored solutions based on your application, specifications, and order quantity.

Web

Entaniya

Entaniya Co., Ltd.
products@entaniya.co.jp

Wire Panel





This panel features a hole for routing a securing wire.
By using a cable gland to pass the wire through the panel, the enclosure can maintain its waterproof integrity while helping prevent accidental drops, loss due to water currents, and unauthorized removal.

Product Name	Part Number
Wire Panel 100	CC-WP-100-PNL-AL25-WR
Wire Panel 125	CC-WP-125-PNL-AL25-WR
Wire Panel 150	CC-WP-150-PNL-AL25-WR
Wire Panel 200	CC-WP-200-PNL-AL25-WR

Acrylic Panel



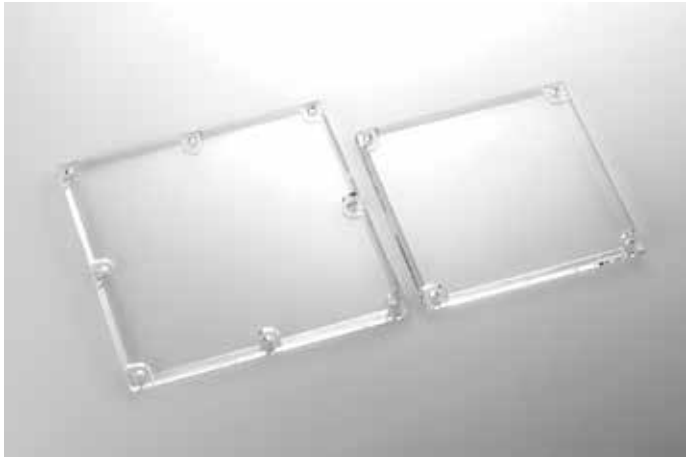

A transparent panel that allows easy viewing of the contents inside the enclosure. It can also be used as a replacement panel.

Product Name	Part Number
Acrylic Panel 100	CC-WP-100-PNL-AC60
Acrylic Panel 125	CC-WP-125-PNL-AC60
Acrylic Panel 150	CC-WP-150-PNL-AC60
Acrylic Panel 200	CC-WP-200-PNL-AC60

Custom Solutions & Volume Quotations for Businesses.

From prototyping and evaluation to mass production and final delivery.
We offer tailored solutions based on your application, specifications, and order quantity.

Web

Entaniya

Entaniya Co., Ltd.
products@entaniya.co.jp

Aluminum Panel





A versatile aluminum panel that can be freely machined and customized to suit a wide range of applications.
Custom machining services, including hole drilling, are also available.

Product Name	Part Number
Aluminum Panel 100	CC-WP-100-PNL-AL25-WR
Aluminum Panel 125	CC-WP-125-PNL-AL25-WR
Aluminum Panel 150	CC-WP-150-PNL-AL25-WR
Aluminum Panel 200	CC-WP-200-PNL-AL25-WR



Custom Drilling and Machining Available for Aluminum Panels

We offer custom drilling and machining services for aluminum panels to accommodate your specific applications and equipment.
Custom machining is available for mounting cameras and sensors, routing cables and connectors, and securing various devices, with hole positions and sizes tailored to your requirements.
From prototypes and small-batch production to volume orders, please feel free to contact us to discuss your needs.

Custom Solutions & Volume Quotations for Businesses.

From prototyping and evaluation to mass production and final delivery.
We offer tailored solutions based on your application, specifications, and order quantity.

Web

Entaniya

Entaniya Co., Ltd.
products@entaniya.co.jp

Heat Pipe Panel for Raspberry Pi

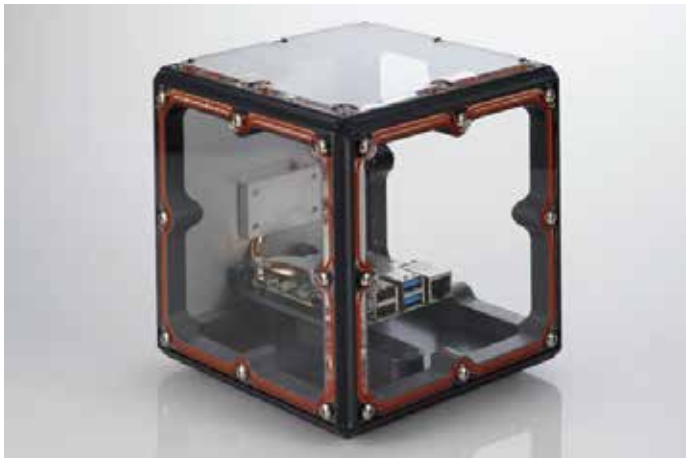



A dedicated panel that combines mounting and heat dissipation functions, allowing a heat pipe to be connected to a Raspberry Pi installed inside the Cube Case.

Product Name	Part Number
Heat Pipe Panel 125 for Raspberry Pi 4	CC-WP-125-PNL-AL25-RPHP
Heat Pipe Panel 125 for Raspberry Pi 5	CC-WP-125-PNL-AL25-RP5HP
Heat Pipe Panel 150 for Raspberry Pi 4	CC-WP-150-PNL-AL25-RPHP
Heat Pipe Panel 150 for Raspberry Pi 5	CC-WP-150-PNL-AL25-RP5HP
Heat Pipe Panel 200 for Raspberry Pi 4	CC-WP-200-PNL-AL25-RPHP
Heat Pipe Panel 200 for Raspberry Pi 5	CC-WP-200-PNL-AL25-RP5HP



Expansion Panel for Raspberry Pi

A raised expansion panel designed to prevent interference between the expansion components and the heat pipe panel when used with the Waterproof Cube Case 125.

Part Number：CC-WP-125-PNL-AC60-EP

Custom Solutions & Volume Quotations for Businesses.

From prototyping and evaluation to mass production and final delivery.
We offer tailored solutions based on your application, specifications, and order quantity.

Web

Entaniya

Entaniya Co., Ltd.
products@entaniya.co.jp

Pedestal Panel for Raspberry Pi



A panel featuring a pedestal for securely mounting a Raspberry Pi 4/5 inside the enclosure.

Product Name	Part Number
Pedestal Panel for Raspberry Pi 125	CC-WP-125-PNL-AL25-RPPD
Pedestal Panel for Raspberry Pi 150	CC-WP-150-PNL-AL25-RPPD
Pedestal Panel for Raspberry Pi 200	CC-WP-200-PNL-AL25-RPPD



A panel featuring a pedestal for securely mounting a Raspberry Pi 4/5 inside the enclosure, along with holes for pass-through connectors to external devices.

Product Name	Part Number
Pedestal Connector Panel 125 125	CC-WP-125-PNL-AL25-CNRPPD
Pedestal Connector Panel 125150	CC-WP-150-PNL-AL25-CNRPPD

USB Type-C Connector Compatible × 1
USB Type-A, HDMI, RJ45 Connector Compatible × 2
Vent Filter × 1

Custom Solutions & Volume Quotations for Businesses.

From prototyping and evaluation to mass production and final delivery.
We offer tailored solutions based on your application, specifications, and order quantity.

Web

Entaniya

Entaniya Co., Ltd.
products@entaniya.co.jp

Cube Case 100

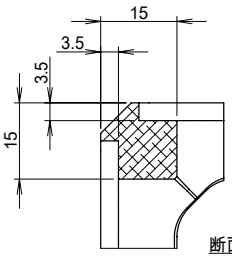

断面図 B-B

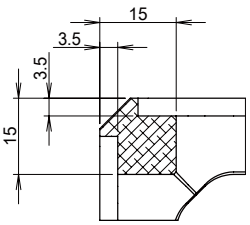

断面図 A-A

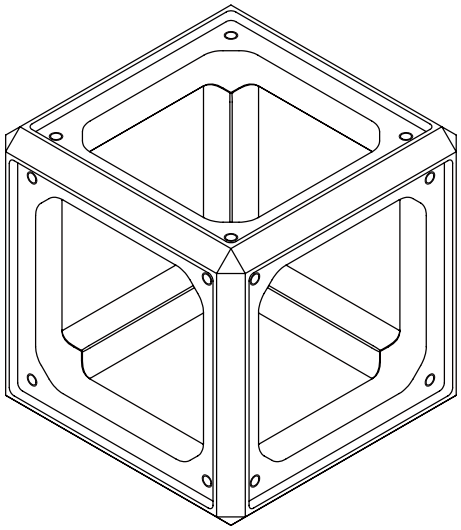

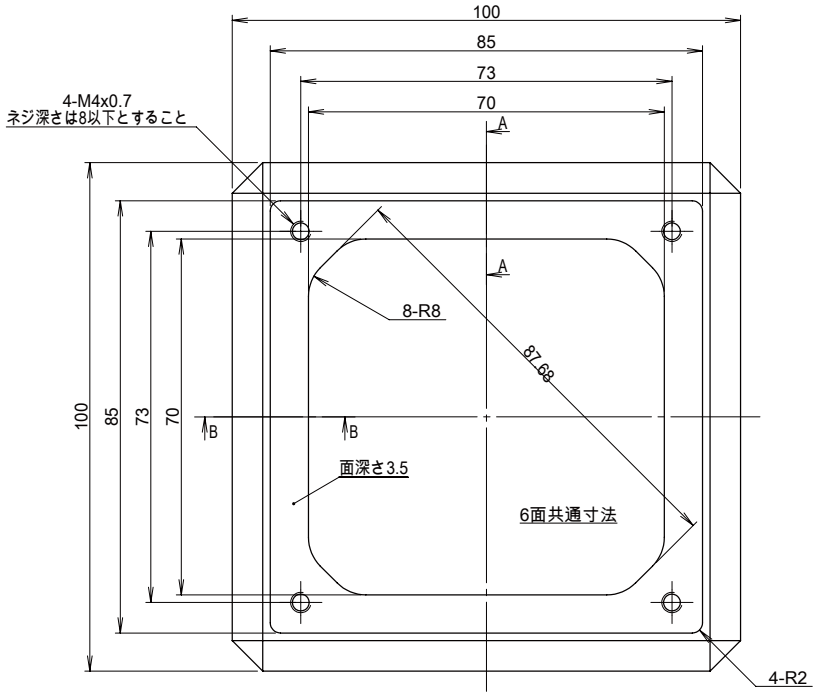

Custom Solutions & Volume Quotations for Businesses.

From prototyping and evaluation to mass production and final delivery.
We offer tailored solutions based on your application, specifications, and order quantity.

Web

Entaniya

Entaniya Co., Ltd.
products@entaniya.co.jp

Cube Case 125

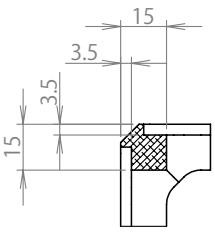

断面図 B-B

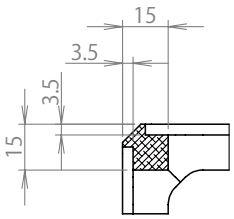

断面図 A-A

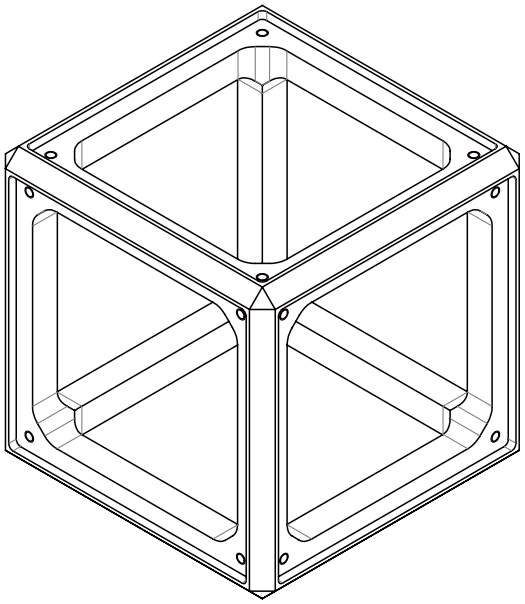

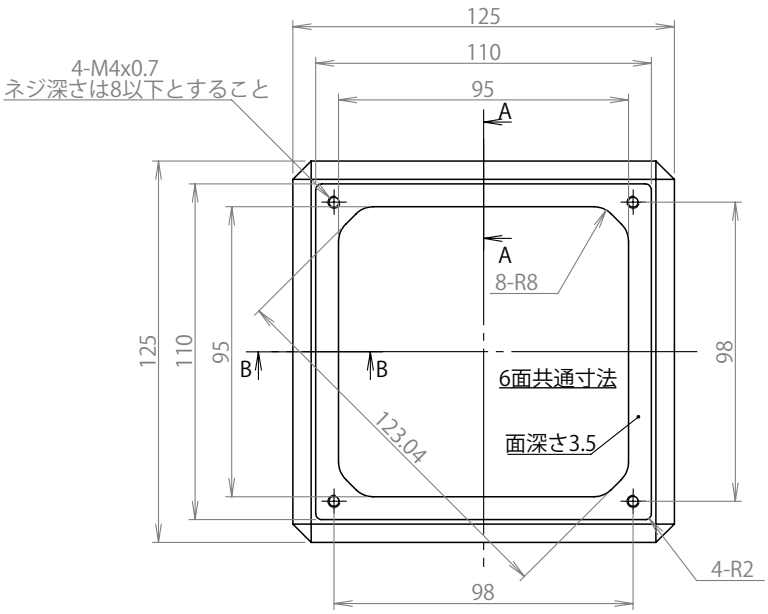

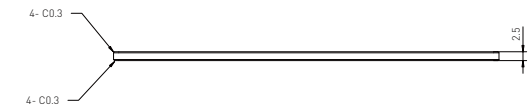

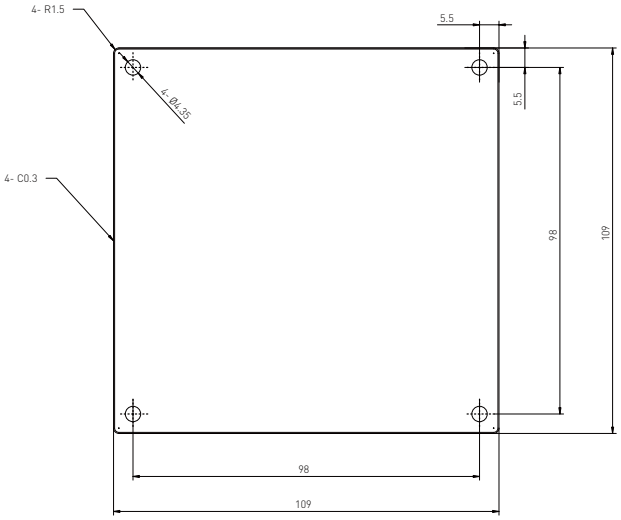

Custom Solutions & Volume Quotations for Businesses.

From prototyping and evaluation to mass production and final delivery.
We offer tailored solutions based on your application, specifications, and order quantity.

Web

Entaniya

Entaniya Co., Ltd.
products@entaniya.co.jp

Cube Case 150

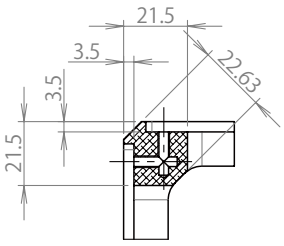

断面図 B-B

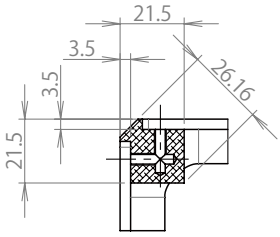

断面図 A-A

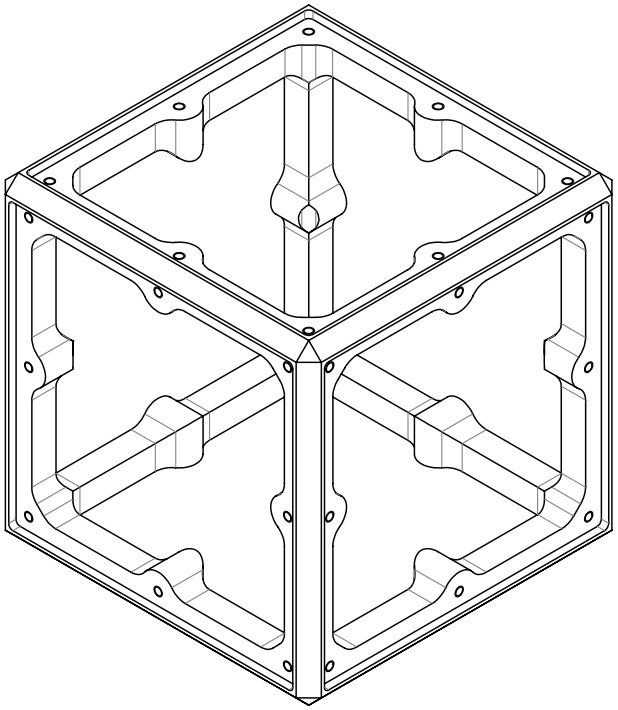

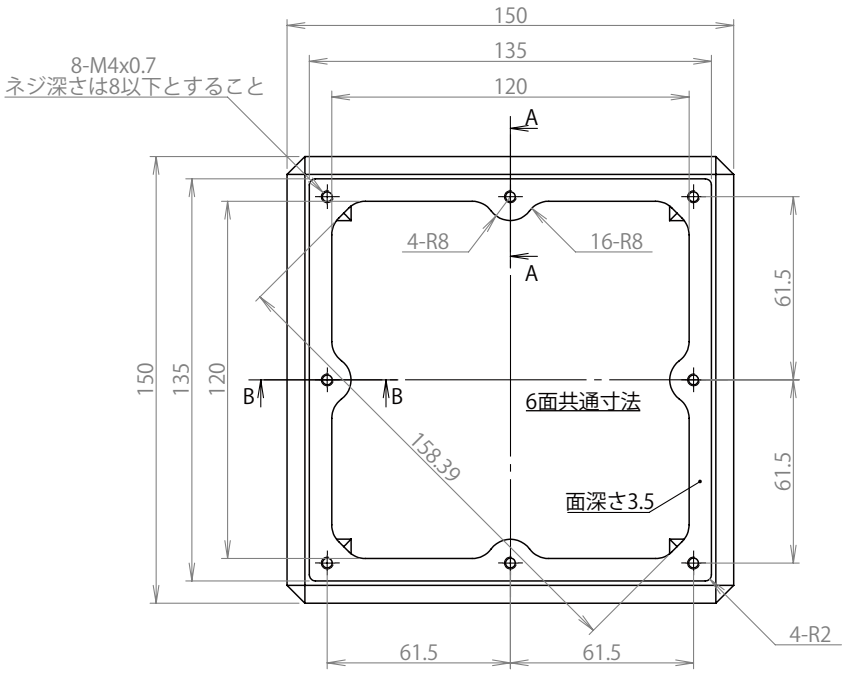

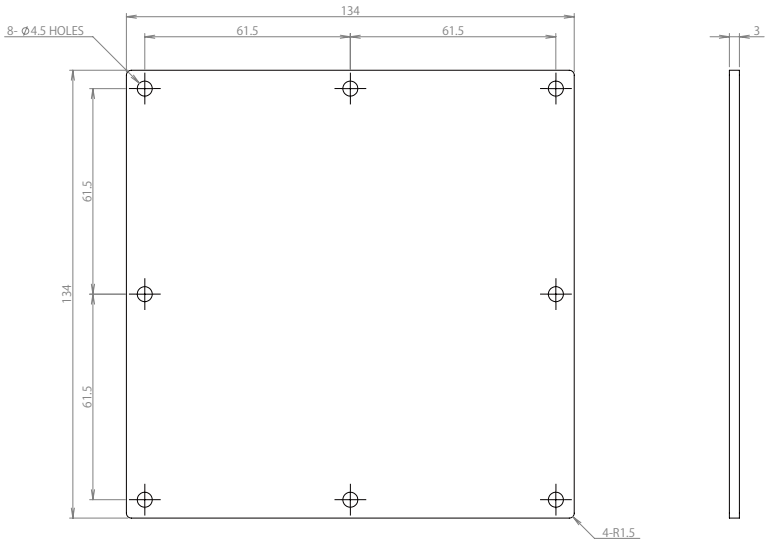

Custom Solutions & Volume Quotations for Businesses.

From prototyping and evaluation to mass production and final delivery.
We offer tailored solutions based on your application, specifications, and order quantity.

Web

Entaniya

Entaniya Co., Ltd.
products@entaniya.co.jp

Cube Case 200

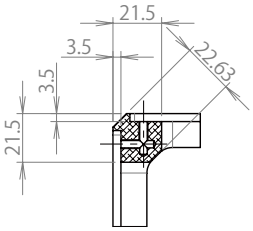

断面図 B-B

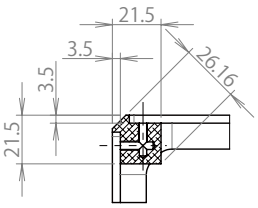

断面図 A-A

